REVISIONS				
REV.	DESCRIPTION	DATE	ENG APPROVED	MFG APPROVED
A	DESIGN REVISED FOR ELECTRICAL PERFORMANCE	3/6/2025	BJM	MCD

8628000G001-017

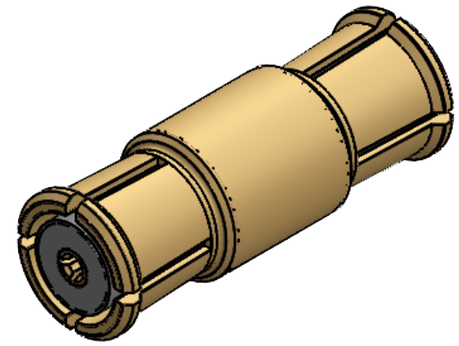

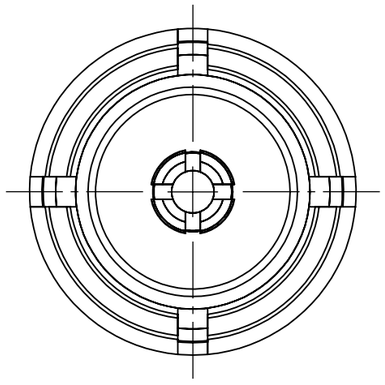

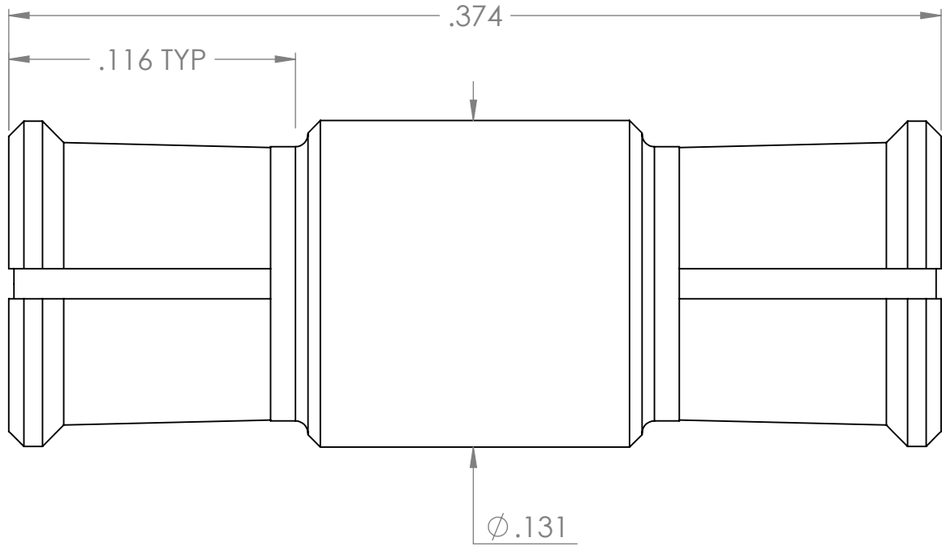

MECHANICAL SPECIFICATIONS	
DURABILITY	1000 MATES
CAPTIVATION - CONTACT	2.0 LBS MIN
ELECTRICAL SPECIFICATIONS	
FREQUENCY RANGE	DC - 40 GHz
VSWR	DC - 10 GHz: 1.2:1 MAX 10 - 18 GHz: 1.4:1 MAX 18 - 40 GHz 1.5:1 MAX
IMPEDANCE	50 ± 2 OHMS
DWV @ SEA LEVEL	500 Vrms
INSULATION RESIST.	5,000 megohms
ENVIRONMENTAL SPECIFICATIONS	
SHOCK	MIL-STD-202, METH. 213 COND I
VIBRATION	MIL-STD-202, METH. 204 COND D
ALTITUDE	MIL-STD-202, METH. 105 COND C
THERMAL SHOCK	MIL-STD-202, METH. 107 COND B
TEMP RANGE	-65° TO +125° C

NOTES:

1. ASSEMBLED CONNECTOR INTERFACE IS DESIGNED IN ACCORDANCE WITH MIL-STD-348.

DESCRIPTION	MATERIAL	FINISH
CONTACT	BERYLLIUM COPPER PER ASTM B196, C17300, TEMPER TD04	GOLD PLATE PER ASTM B488
BODY	BERYLLIUM COPPER PER ASTM B196, C17300, TEMPER TD04	GOLD PLATE PER ASTM B488
CONTACT - HIGH FREQUENCY	BERYLLIUM COPPER PER ASTM B196, C17300, TEMPER TD04	GOLD PLATE PER ASTM B488, TYPE 2, CLASS 1.27
INSULATORS	TEFLON PER ASTM D1710, TYPE 1, GRADE 1, CLASS A.	N/A
BODY - HIGH FREQUENCY	BERYLLIUM COPPER PER ASTM B196, C17300, TEMPER TD04	GOLD PLATE PER ASTM B488, type 2, class 1.27

Table 1

PROPRIETARY AND CONFIDENTIAL

THE INFORMATION CONTAINED IN THIS DRAWING IS THE SOLE PROPERTY OF DELTA ELECTRONICS MFG CORP. ANY REPRODUCTION IN PART OR AS A WHOLE WITHOUT THE WRITTEN PERMISSION OF DELTA ELECTRONICS MFG CORP. IS PROHIBITED.

FILE NAME: 8628000G001-017T

UNLESS OTHERWISE SPECIFIED:

DIMENSIONS ARE IN INCHES
TOLERANCES:
FRACTIONAL ± 1/64
ANGULAR: MACH ± 1° BEND ± 1°
TWO PLACE DECIMAL ±.01
THREE PLACE DECIMAL ±.005
SURFACE FINISH = 63
MAX. CORNER BREAKS = .004

THIRD ANGLE PROJECTION

MATERIAL SEE TABLE

FINISH SEE TABLE

SCALE: 16:1

	NAME	DATE
DRAWN	ADK	7/25/2016
CHECKED	ADK	7/25/2016
ENG APPR.	BJM	7/25/2016

COMMENTS:

DELTA ELECTRONICS MFG CORP.
BEVERLY, MA 01915
www.deltarf.com / Ph: 978-927-1060 / Fax: 978-922-6430

TITLE:
SMP STRAIGHT
ADAPTER FEMALE - FEMALE
.374 LONG

SIZE	DWG. NO.	REV
B	8628000G001-017	A

CODE ID - 00795 | WEIGHT: 0.33 g | SHEET 1 OF 1