DELTA
ELECTRONICS MFG. CORP

8628000G001-007

ELECTRICALS

IMPEDANCE	50	OHMS
RF HIGH POT. (@ 5 MHz)	335	V rms
DWV (@ SEA LEVEL)	500	V rms
INSULATION RESIST	5,000	megOHMS(min)
FREQ. RANGE	DC - 40	GHz
TYP. VSWR	1.5	MAX

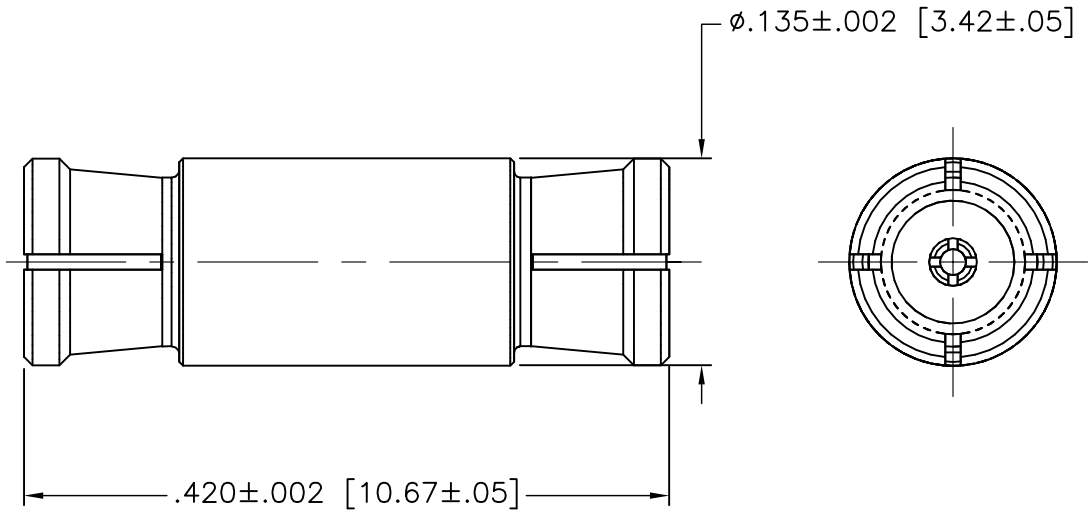

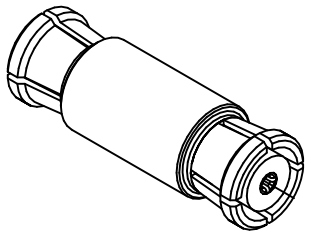

ISOMETRIC VIEW

NOTES:
1. ASSEMBLED CONNECTOR INTERFACES ARE DESIGNED IN ACCORDANCE WITH MIL-STD-348.
2. MATERIAL: INSULATOR – TEFLON PER ASTM D4894, TYPE I,GRADE 1, CLASS B
   CONTACT & HOUSING – BERYLLIUM COPPER PER ASTM B196, C17300 ALLOY. HT
3. FINISHES: CONTACT & HOUSING – GOLD PLATE PER ASTM B488, TYPE II, CODE C

–	OUTLINE	12/28/11
ALT.	REVISIONS	DATE

UNLESS OTHERWISE SPECIFIED: TOLERANCES: 3 PLACES = ±.005, 2 PLACES = ±.02, ANGLES = ±1/2°, SURFACE FINISH = 63

THESE DRAWINGS AND SPECIFICATIONS ARE THE PROPERTY OF DELTA ELECTRONICS MFG CORP. AND SHALL NOT BE REPRODUCED, OR COPIED OR USED AS THE BASIS FOR THE MANUFACTURE OR SALE OF APPARATUS OR DEVICES WITHOUT THEIR EXPRESS WRITTEN CONSENT.

DELTA ELECTRONICS MFG. CORP. Beverly, MA 01915

TITLE: SMP BULLET ADAPTER – JACK TO JACK – .420 (10.67 MM) LONG

Drawn by	Scale	Ckd. by	Engr Appd	FILE NAME:
ADK 12/28/11	8/1	BJM	BJM	8628000G001-007T

CODE IDENT.-00795 | 8628000G001-007