DELTA
ELECTRONICS MFG. CORP

1116-031-N723-3

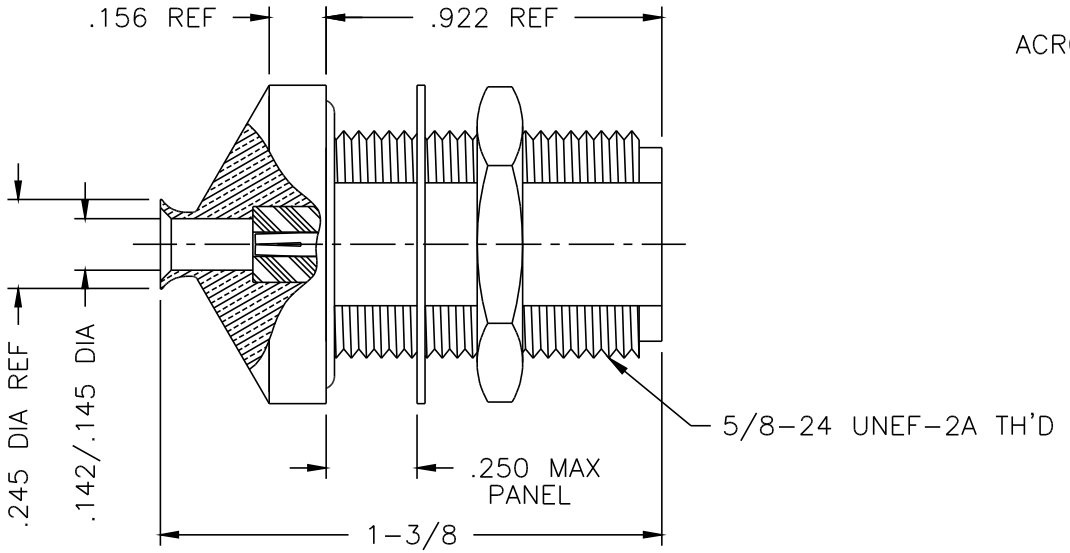

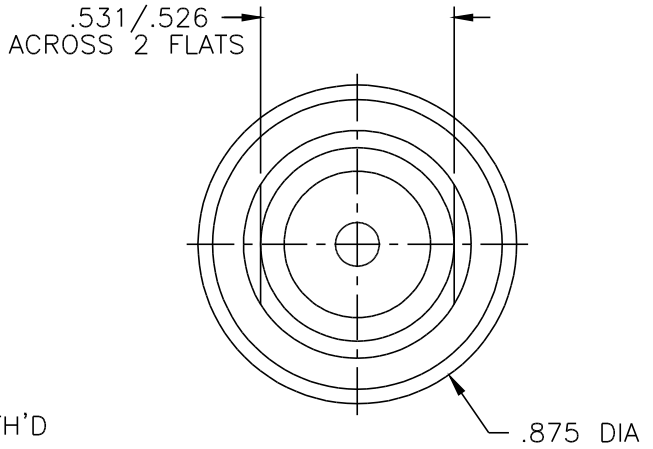

VIEW SHOWN WITH HEX NUT
AND LOCKWASHER REMOVED

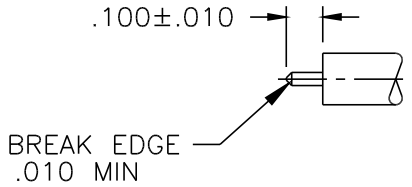

RECOMMENDED CABLE
TRIMMING DIMENSIONS

NOTES:

1. ASSEMBLED CONNECTOR INTERFACE IS DESIGNED IN ACCORDANCE WITH MIL-STD-348.
2. MATERIAL: BODY & HEX NUT – BRASS PER ASTM B16
   LOCKWASHER – SPRING STEEL
   CONTACT – BERYLLIUM COPPER PER ASTM B196.
   INSULATOR – TEFLON PER ASTM D1710
   O-RING – BUNA-N, 60±10 DUROMETER (A)
3. FINISHES: BODY, HEX NUT & LOCKWASHER – NICKEL PLATE PER QQ-N-290
   CONTACT – GOLD PLATE PER MIL-G-45204

A	MAT. UPDATE	8/27/97
-	OUTLINE	2/26/96
ALT.	REVISIONS	DATE

UNLESS OTHERWISE SPECIFIED: TOLERANCES: 3 PLACES = ±.005, 2 PLACES = ±.02, ANGLES = ±1/2°

THESE DRAWINGS AND SPECIFICATIONS ARE THE PROPERTY OF DELTA ELECTRONICS MFG CORP. AND SHALL NOT BE REPRODUCED, OR COPIED OR USED AS THE BASIS FOR THE MANUFACTURE OR SALE OF APPARATUS OR DEVICES WITHOUT THEIR EXPRESS WRITTEN CONSENT.

DELTA ELECTRONICS MFG. CORP. Beverly, MA 01915

TITLE: "N" BULKHEAD CABLE JACK, DIRECT SOLDER ATTACH FOR .141 SEMI-RIGID CABLE

Drawn by	Scale	Ckd. by	Engr Appd	FILE NAME:
MCD 2/26/96	2/1			1116031N723-003T

CODE IDENT.-00795 | 1116-031-N723-3