1397-000-K051-019

DELTA ELECTRONICS MFG. CORP

DIMENSIONS IN BRACKETS ARE IN MILLIMETERS AND ARE FOR REFERENCE ONLY.

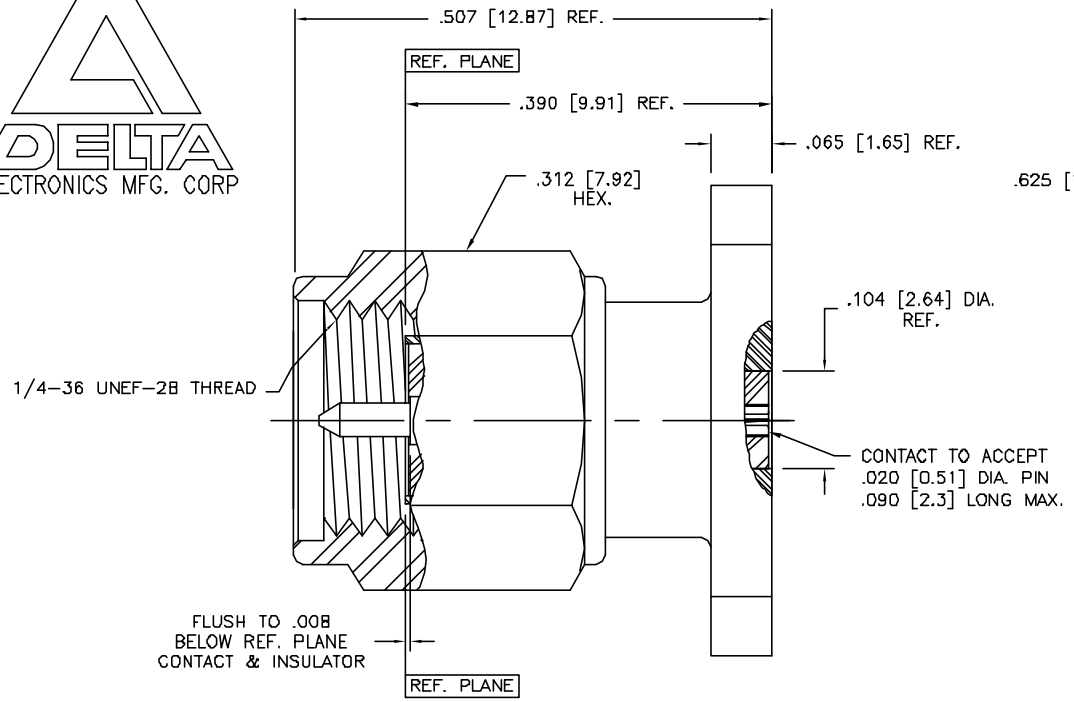

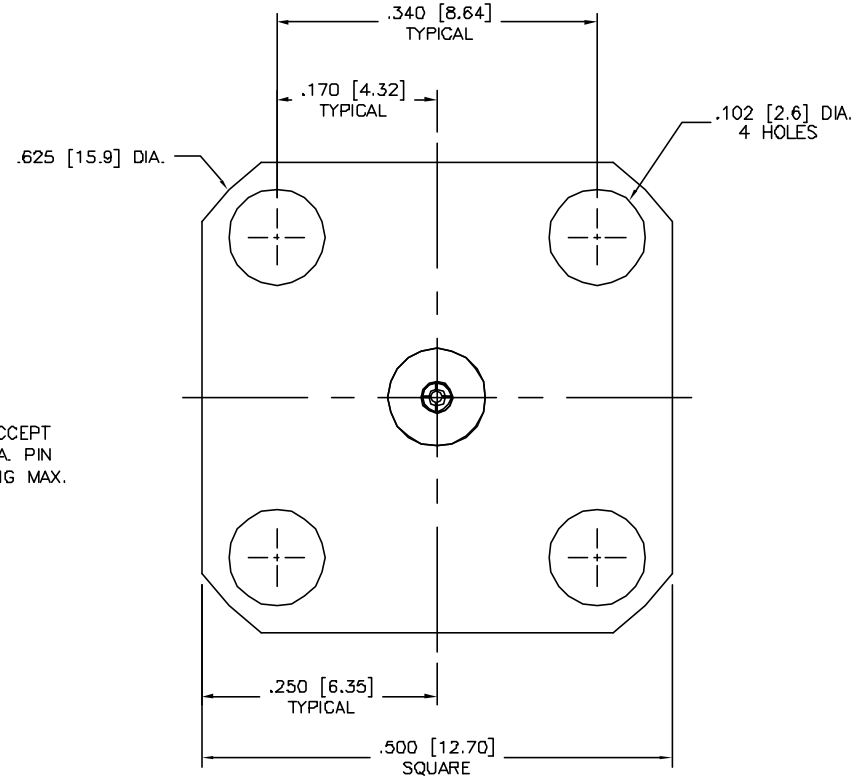

NOTES:

1. ASSEMBLED CONNECTOR INTERFACE IS DESIGNED IN ACCORDANCE WITH MIL-STD-348, EXCEPT WHERE NOTED.
2. MATERIAL: BODY & COUPLING NUT – CORROSION RESISTANT STEEL, SERIES 303, PER ASTM A582
   CONTACT – BERYLLIUM COPPER PER ASTM B196.
   LOCKING RING – BERYLLIUM COPPER PER ASTM B196
   INSULATOR – TEFLON PER ASTM D1710
   GASKET – SILICONE RUBBER PER A-A-59588
3. FINISHES: BODY & COUPLING NUT – PASSIVATE PER AMS-QQ-P-35
   CONTACT – GOLD PLATE PER MIL-G-45204
4. ELECTRICAL DATA:
   FREQUENCY: DC TO 26.5 GHz
   VSWR: DC TO 18.0 GHz – 1.15:1 MAXIMUM
   18.0 TO 26.5 GHz – 1.25:1 MAXIMUM
   INSERTION LOSS: $.03\sqrt{f(GHz)}$ dB MAXIMUM
   INSULATION RESISTANCE: 5,000 MEGOHMS MINIMUM
   VOLTAGE RATING: 1,000 Vrms MINIMUM AT SEA LEVEL,
   250 Vrms MINIMUM AT 70,000 FEET
   DIELECTRIC WITHSTANDING VOLTAGE: 1,000 Vrms MINIMUM
   RF LEAKAGE: -100 dB MIN.

ALT.	REVISIONS	DATE
–	OUTLINE	11/16/06

UNLESS OTHERWISE SPECIFIED: TOLERANCES: 3 PLACES = ±.005, 2 PLACES = ±.02, ANGLES = ±1/2°, SURFACE FINISH = 63

THESE DRAWINGS AND SPECIFICATIONS ARE THE PROPERTY OF DELTA ELECTRONICS MFG CORP. AND SHALL NOT BE REPRODUCED, OR COPIED OR USED AS THE BASIS FOR THE MANUFACTURE OR SALE OF APPARATUS OR DEVICES WITHOUT THEIR EXPRESS WRITTEN CONSENT.

ALT.	REVISIONS	DATE	ENGR APPD	MFG APPD
–	REL ERN	x		

FILE NAME: 1397000K911-019T PLT @ 8/1

DELTA ELECTRONICS MFG. CORP. Beverly, MA 01915

TITLE: 'SMA' PANEL MOUNT PLUG RECEPTACLE, 4 HOLE FLANGE FIELD REPLACEABLE, FLUSH TEFLON – ACCEPTS .020 D. PIN

MATERIAL: SEE NOTE 2

FINISH: SEE NOTE 3

DWN	Scale	Ckd. by	Mfg. Appd.	Engr. Appd.
STM 03/17/05	8/1			

CODE IDENT.-00795 | 1397-000-K051-019